This drawing contains confidential proprietary information of Triple C, Inc. and is subject to return upon request. The furnishing of this drawing is not to be construed as the grant of any license, express or implied, to manufacture, have manufactured, use or sell the structures shown hereon.

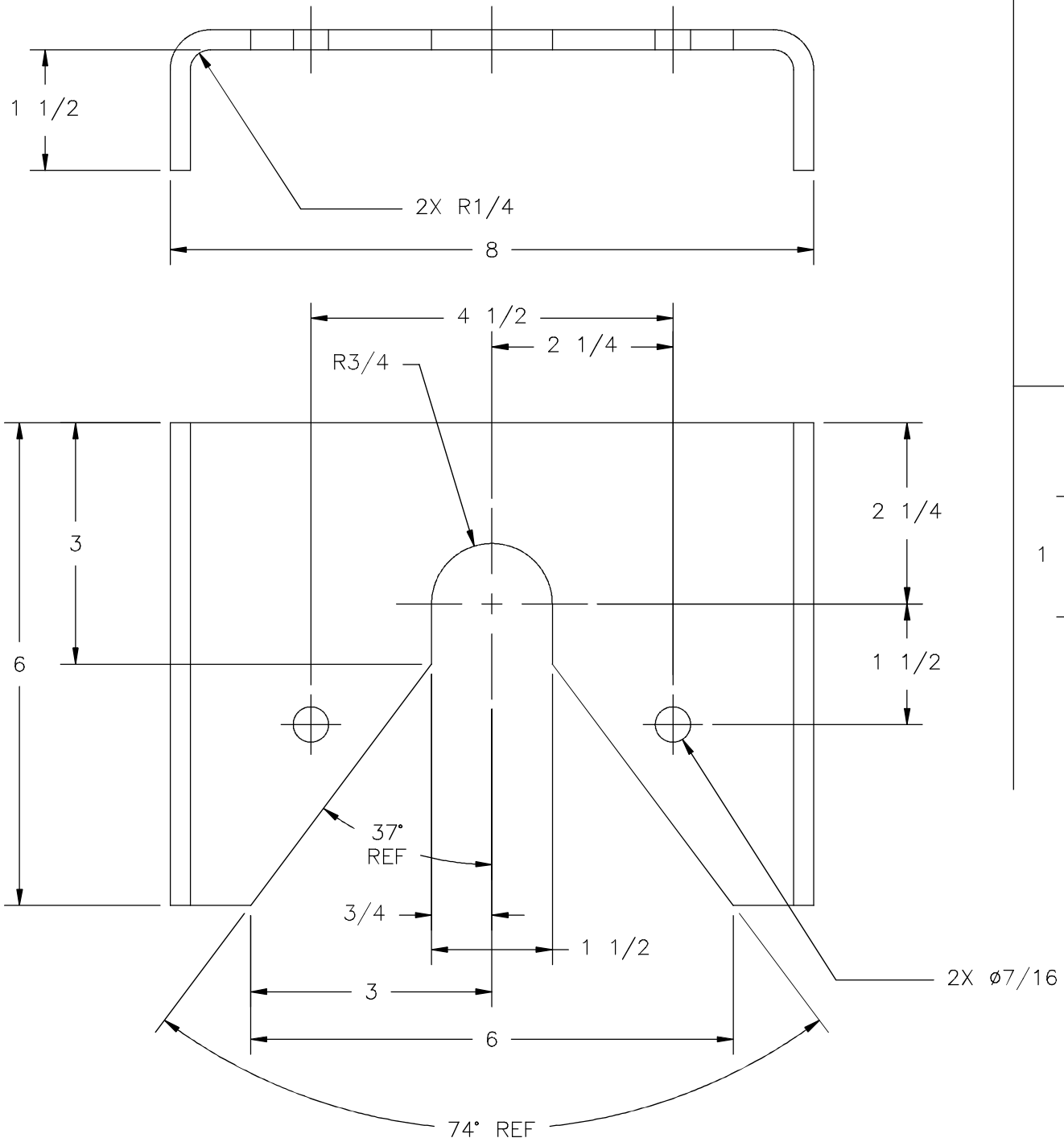

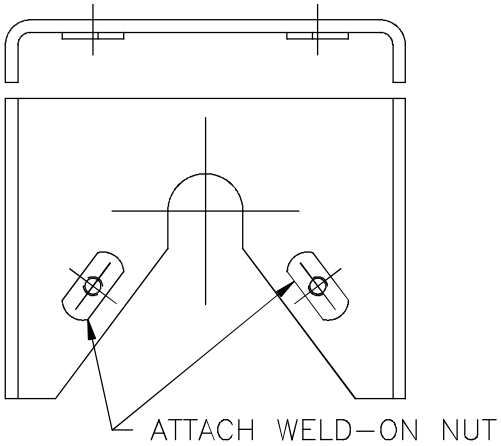

BRACKET ASSEMBLY
SCALE: 1/4

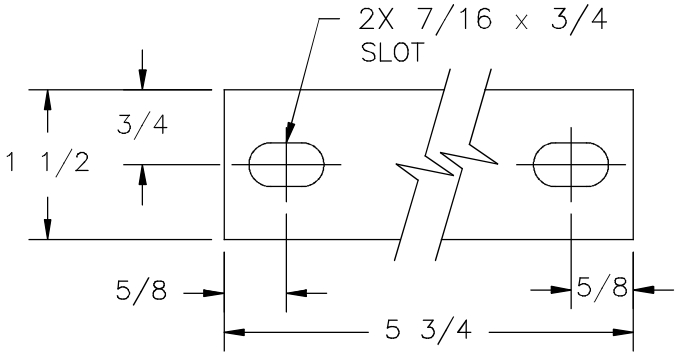

HF12-22A
MATL: 1/4 x 1 1/2 HRS

TRIPLE C INC.
P.O. BOX 248, SABETHA, KS 66534
(785) 284-3674 FAX (785) 284-3931

TOLERANCES Unless otherwise specified	SHEET	SCALE:	DRAWN BY:
XX .010	___OF___	1:2	CEDRIC HEINIGER 11/02/95
XXX .005	TITLE:		
XXXX .0005	LIFT BRACKET HYDRA FEEDER		
X/X 1/32			
ANGLE 0°30'			

ASSEMBLY NUMBER:	DRAWING NUMBER:	REV
HF12-22	30-1202	A

08/10/05